PHOTOTUBES
TYPE UV1 UV2/N UV3

FLAME SENSORS FOR GAS BURNERS

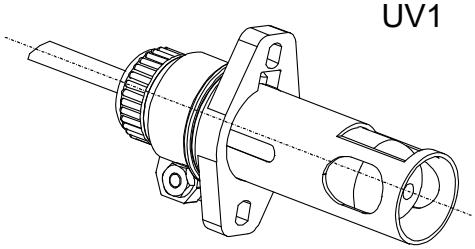

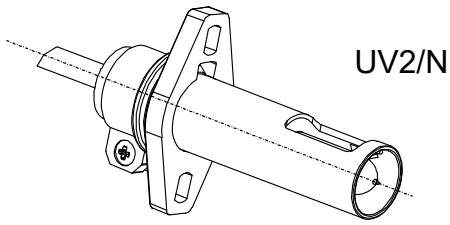

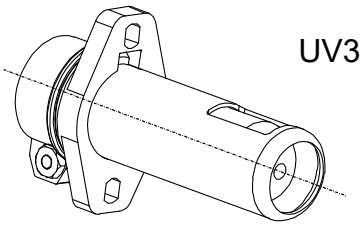

INTRODUCTION

Flame detection in burners occurs by means of sensors detecting the presence of flame through an electric signal which can be used by ignition and control devices.

UV phototubes exploit the ultra-violet radiation emitted by the light generated by the flame; they are especially suitable for applications in which very dissimilar fuels (e.g., liquid and gaseous fuels) are used.

FEATURES

These sensors are used for flame detection in gas and mixed fuel (gas and oil) burners. UV phototubes consist of a glass bulb filled with gas, containing two electrodes suitably shaped. When supplying both electrodes with AC voltage, if ultra-violet electromagnetic radiation (range from 190 to 290 nm) hits the phototube, the electrons emitted by the negative biased electrode, and captured by the positive biased one, start an ionization process leading to the generation of an electric discharge and hence to the production of electric current.

UV1, UV2/N and UV3 are the available phototube models; their features and dimensions are described hereunder.

ПРОМЭЛЕКТРОНИКА / sales@prom-elec.com

PHOTOTUBE TYPE UV1

Phototubes type UV1 are available with two different sensitivity:

- Standard sensitivity
- /H: high sensitivity

The standard cable length is 655 mm, but versions with longer cables are available.

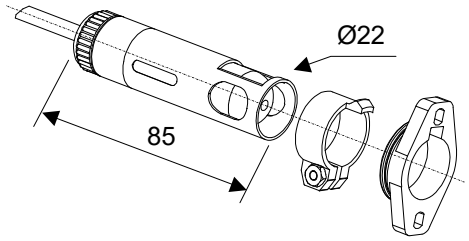

Figure 1

PHOTOTUBE TYPE UV2/N

Phototubes type UV2/N are smaller than type UV1 (the length and the diameter of the housing are smaller).

The standard cable length is 655 mm, but versions with longer cables are available.

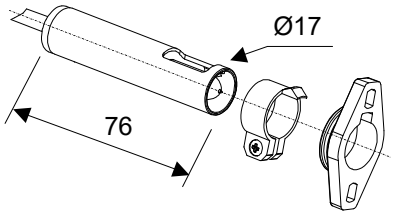

Figure 2

PHOTOTUBE TYPE UV3

The length and the superficial treatment of the housing and the side windows are the differences between models UV3 and UV1. The superficial treatment of the housing consists of a chromium plating.

The UV3 phototube has no cable, which is supplied as an accessory (see figure 1).

Phototubes type UV3 are available with two different sensitivity:

- Standard sensitivity
- /H: high sensitivity

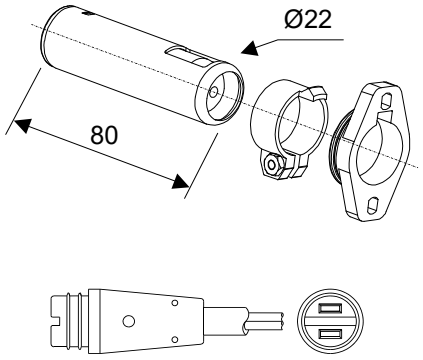

Figure 3

Figure 4 shows the UV1, UV2/N and UV3 drilling plane.

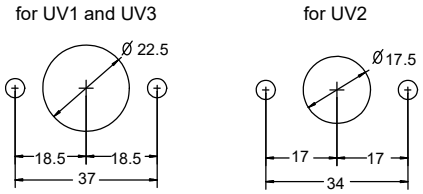

Figure 4

TECHNICAL DATA

Nominal lifetime:	**10.000 hours (*)**
Maximum distance from UV source:	**1 m**
UV1-3 sensor temperature range:	**-20 ÷ +50 °C (*)**
UV2/N sensor temperature range:	**-20 ÷ +60 °C**

(*) The UV1 and UV3 phototubes can operate also at a temperature higher than + 50°C, but in this case the sensor lifetime will be shorter than the 10.000-hour nominal life.

DIRECTIVITY AND RELATIVE SENSITIVITY

In the graphs below you can see the characteristic graphs of the phototubes:

<u>UV1-UV3</u>

Directivity

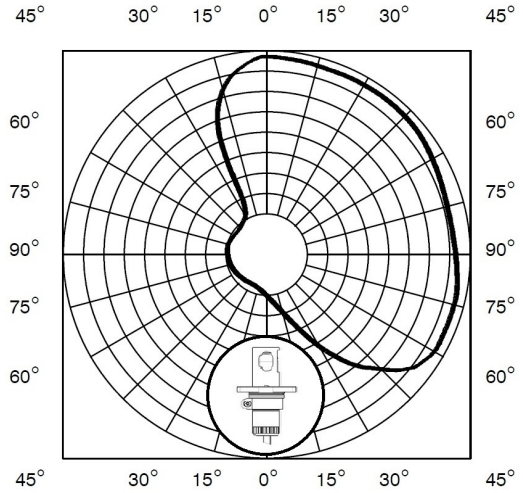

Front and top view - Figure 5

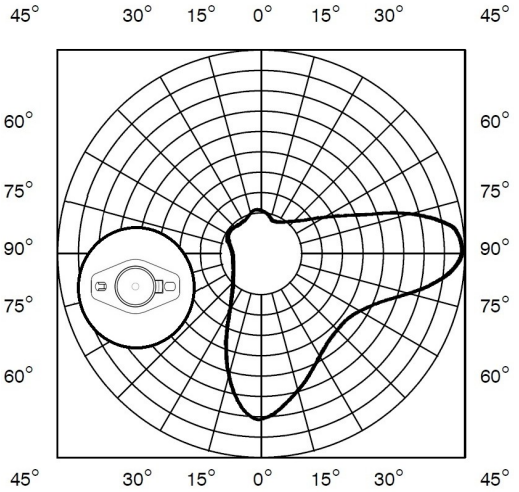

Front view - Figure 6

Relative sensitivity

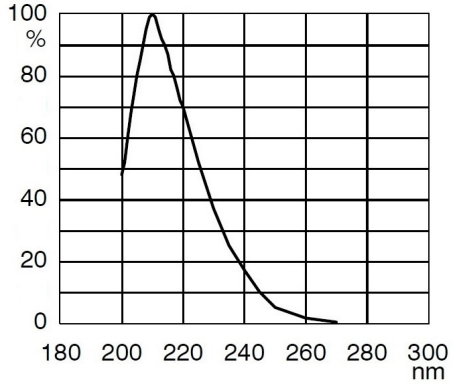

Sensitivity - Figure 7

UV2/N
Directivity

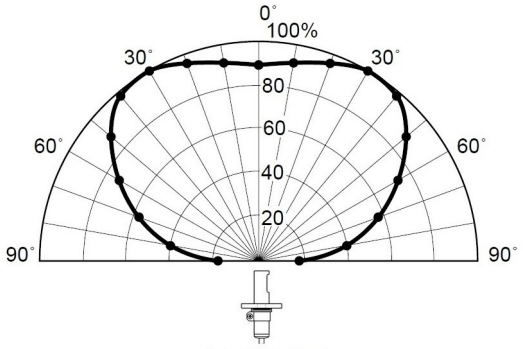

Top view - Figure 8

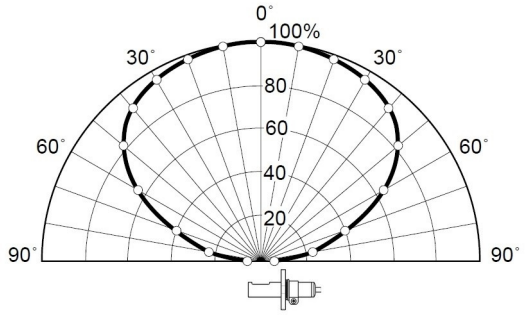

Front view – Figure 9

Relative sensitivity

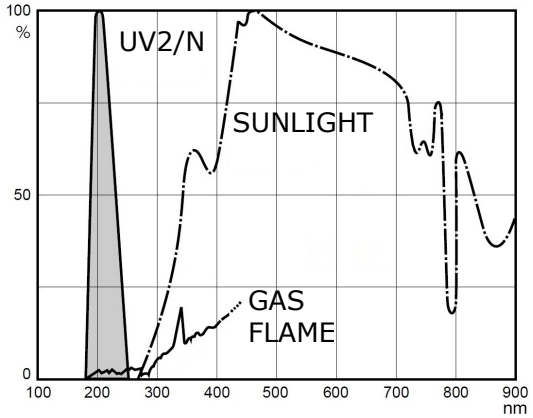

Sensitivity - Figure 10

CONNECTION

The blue wire is marked with number 8 because it must be connected to terminal 8 in Brahma devices series MF2, MF2.4, SR3/TR and M300 (and to terminal 21 in Brahma device type MPI); the brown wire must be connected to the earth.

In the Brahma device type RE3 the blue wire must be connected to terminal n°3 and the brown wire to terminal n°4.

DIRECTIONS FOR INSTALLATION

- Respect the applicable national and European standards (EN 60335-1 and EN 60335-2-102) regarding electrical safety.
- Avoid placing the detection cable close to power or ignition cables.
- To avoid problems due to the ageing of the sensing element, we recommend replacing it after about 10.000 operating hours. These flame sensors are not sensitive to daylight and do not need any particular screening, unless they are positioned close to gas-discharge lamps (neon lamps or similar) that might affect their performance.
- Avoid subjecting the device to strong stress, impacts or falls.
- The sensing part of the bulb collects the light signal through both the side and the top windows: take this into account during installation and make sure that at least one window is well illuminated by the flow of incident light. It may be worth noting that the UV3 is provided with one side window only and is therefore more selective than the UV1 which has three.
- Handle UVx always from the housing and never from the cable.

REPLACING THE SENSING ELEMENT IN PHOTOTUBES TYPE UV1 AND UV3:

In these types of phototubes, the sensing element can be replaced by simply pulling it out of the housing top opening. The new sensing element must be inserted into the housing with the orientation shown in the following figure:

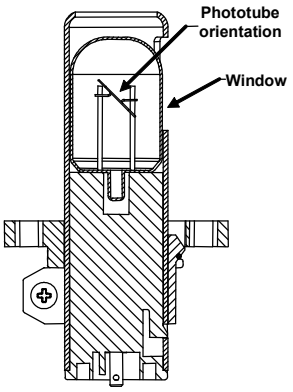

Figure 12

NOTES ABOUT PRODUCT DISPOSAL

The device contains electronic components and cannot therefore be disposed of as normal household waste. For the disposal procedure, please refer to the local rules in force for special waste.

ATTENTION → Company Brahma S.p.A. takes no responsibility for any damage resulting from Customer tampering with the device.

BRAHMA S.p.A
Via del Pontiere, 31
37045 Legnago (VR)
Tel. +39 0442 635211 - Telefax +39 0442 25683
http://www.brahma.it
E-mail : brahma@brahma.it

11/02/2021 Subject to amendments without notice