EG40... SERIES*

SOLENOID GAS VALVES WITH 1½" CONNECTIONS AND OPERATING PRESSURE UP TO 200 mbar

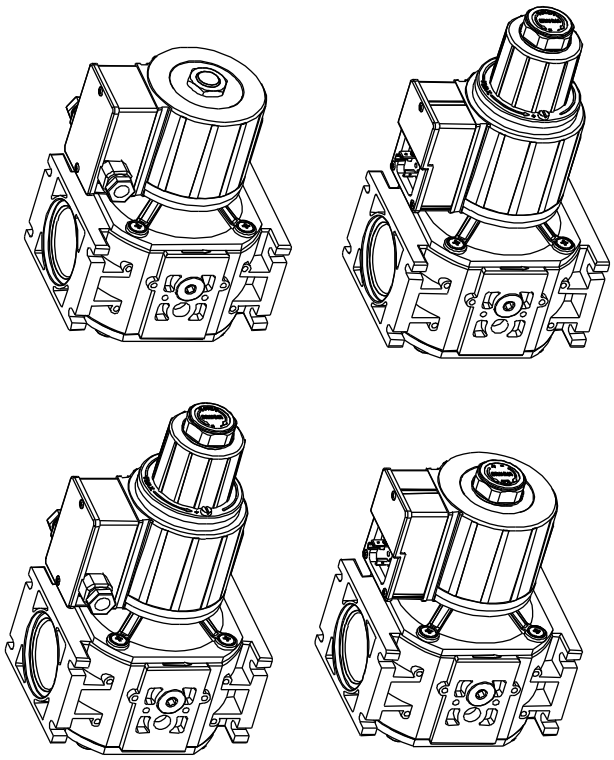

GENERAL DESCRIPTION

This series of solenoid valves are of normally closed type, suitable for civil and industrial applications, supplied with alternate current.
These devices are provided with a special rectifier circuit which supplies the valve coil with a high inrush power at starting (70 W in fast opening version and 138 W in slow opening version); then it reduces the power rating preventing the valve coil from overheating and keeping the gas valve in operating condition. This special circuit has enabled to achieved high operating pressure values using a small size valve coil.
A wire-net filter on the inlet avoids the entrance of dirt of > 1 mm.
There is the possibility to have a fast opening or a slow opening valve (obtained by special hydraulic shock-absorber), with flow adjustment and fast opening initial flow adjustment.
All versions can be connected with suitable fixing brackets, provided with by-pass solenoid valves and pressure plugs upstream and downstream.
Gas valves of this series are in compliance with European standard EN161 and have the EC-type certificate (CE PIN 0063AQ0626) in accordance with the Gas Appliance Directive 90/396/EEC and the following amendment 93/68/EEC.

- **EC**- type certification in accordance with the new European **G**as **A**ppliances **R**egulation (EU) 2016/426 (GAR);
- conformity to **EC** Low-voltage directive 2014/35/EU
- **AGA**- type certification (Certificate no. 4314 rev. 10) in accordance to standard requirements AS 4629-2005 (Incorporating Amdt 2);

TECHNICAL FEATURES

- DN:	40
- Class:	A
- Group:	2
- Supply voltage:	230V/50-60Hz
- Operating temperature:	-10°C / +60°C
- Closing time:	≤ 1s
- Opening time:	≤ 1s (quick opening versions only)
- Protection degree:	GMO IP54 GFD IP54
- Mounting:	vertical and horizontal
- Body:	die-cast aluminium
- Core hitch:	PG9

DIRECTIONS FOR INSTALLATION AND MAINTENANCE

- This valve is a safety appliance and should not be modified. The manufacturer's responsibility and guarantee are invalidated in case the device is tampered with by the user.
- The applicable national regulation and European standards (Ex. EN 60335-1 and EN 60335-2-102) related to the electrical safety must be respected;
- Assemble the valve to the installation so that the arrow on the valve body has the same direction as the fuel flow.
- During the assembly of the valve to the installation piping, avoid twisting on the sheath and always use an hexagonal wrench to be fitted to the valve body.

- Make sure that no foreign matters have entered the valve body.
- Make sure that the max. fuel input pressure never exceeds the value appearing on the label.
- All operations (installation, maintenance, etc.) must be carried out by a qualified technician.
- Before any connection operation, completely isolate the system from power supply (multi-pole disconnection). Place the system safely to avoid accidental switch-on and make sure there is no voltage. If the system is not switched off, there is a risk of electric shock.
- During and after any operation (installation, maintenance, etc.), make sure that the type and code are the ones provided, check the correct functioning and the internal and external thickness of the valve.
- In the event of a fall or impact, the valves must not be started, as safety functions may be compromised even if no damage is visible to the outside.
- Faulty valves or damaged must be unplugged from power supply and cannot be used.
- The valve has a designed lifetime* based on the endurance tests in the standard EN 161. A summary of the conditions has been published by the European Control Manufacturers Association (Afecor) (www.afecor.org). The designed lifetime is based on use of the valve according to the manufacturer's technical notes. After reaching the designed lifetime in terms of the number of burner startup cycles, or the respective time of usage, the valve has to be replaced by authorized personnel.
  * The designed lifetime is not the warranty time specified in the Terms of Delivery.

DIRECTIONS FOR EG40*L... VALVES ADJUSTMENT

Flow adjustment
To adjust the gas flow, you have to remove one of the two screws used to fasten the lag group (the not enamelled one, marked with 4 in Fig. 1) and rotate clockwise the whole group to reduce the flow or in the opposite direction to increase it.

Opening time adjustment
After removing the top protection, by rotating it counterclockwise, you have to act on the adjustment screw, marked with 1 in Fig. 1. By rotating clockwise, the opening time becomes longer; by rotating in the opposite direction, the opening time becomes shorter.

Quick release initial flow adjustment
After removing the top protection by rotating it counterclockwise, if you rotate clockwise the nut marked with 2 in Fig. 1, the initial release will be reduced; if you rotate the same nut counterclockwise, the initial release will be increased.

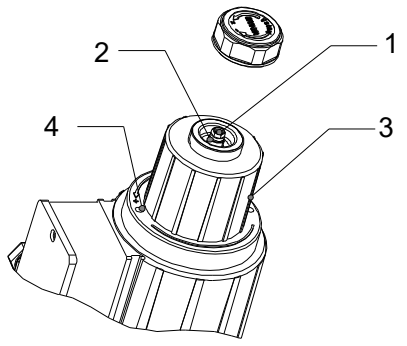

Fig. 1

SOLENOID VALVES CONNECTIONS
It is possible to connect two valves by means of four screws and an O-ring to guarantee the sealing as shown in Fig. 3. This method permits to avoid the onerous use of threaded junctions.

SOLENOID VALVES WITH BY-PASS
All versions of EG40*... valves can be equipped with a by-pass valve directly fitted on the body. In this way it is avoided the installation of a separated by-pass valve.
Both to the main valve and to the by-pass one, flow is given from the same inlet gas pipe, even if they have different electrical controls.
By-pass valve can have fast or slow opening and can be with or without flow adjuster, but anyway inclusive of an inside rectification circuit, which permitted to use suitable attenuators to make its actions as silent as possible.

DIRECTIONS FOR EG40*SR... VALVES ADJUSTMENT

Flow adjustment
After removing the top protection by rotating it counterclockwise, rotate clockwise the screw marked with 1 in Fig. 2 to reduce the flow, rotate in the opposite direction to increase the same.

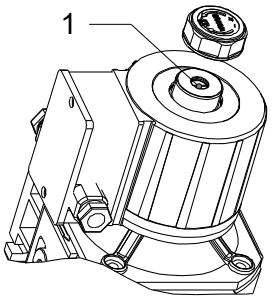

Fig. 2

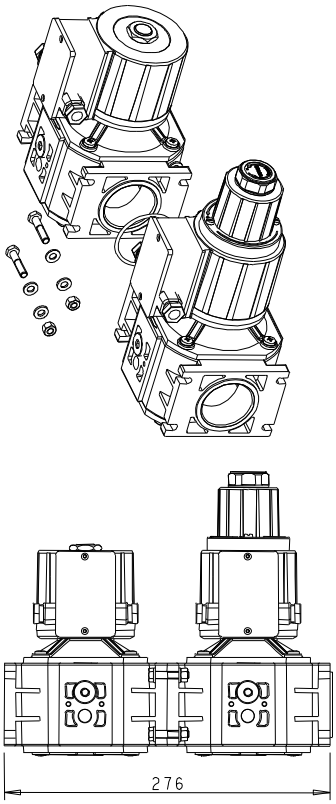

Fig. 3

DIAGRAM

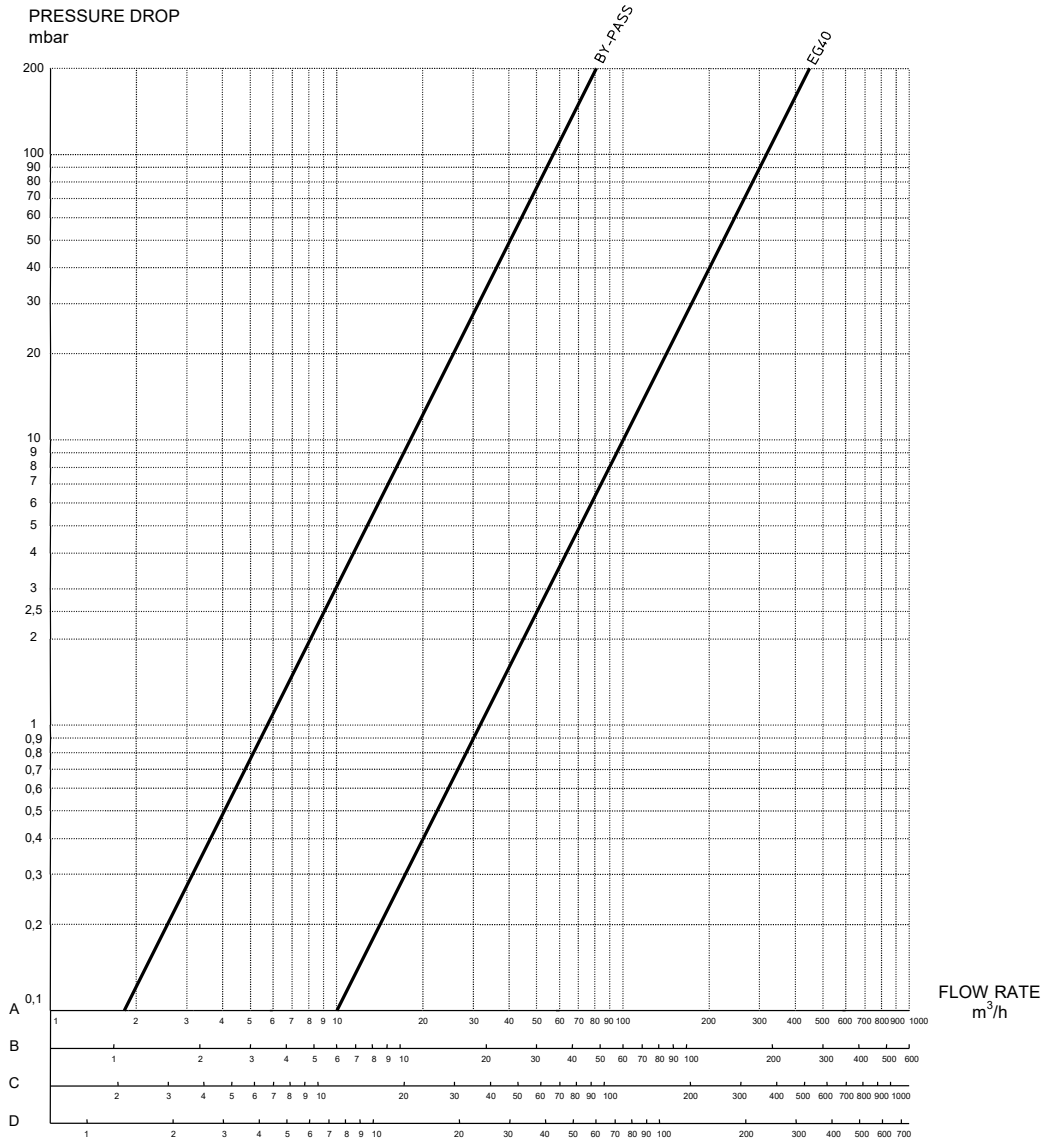

A : Standard flow rate m^3/h of NATURAL GAS relative density 0.554
B : Standard flow rate m^3/h of LPG relative density 1.54
C : Standard flow rate m^3/h of TOWN GAS relative density 0.411
D : Standard flow rate m^3/h of AIR relative density 1

OVERALL DIMENSIONS

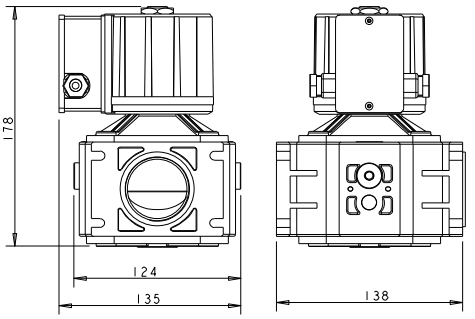

EG40*S*GMO

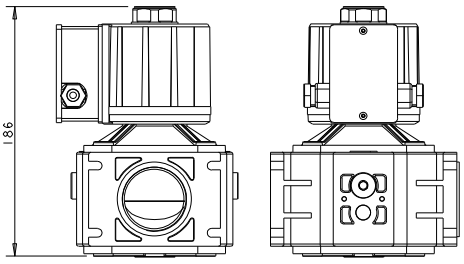

EG40*SR*GMO

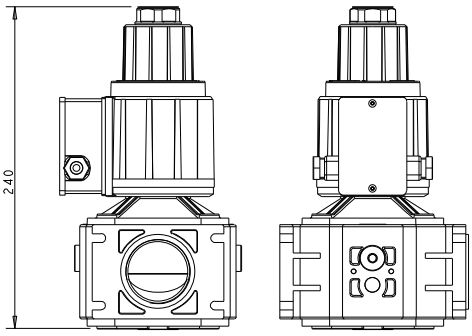

EG40*L*GMO

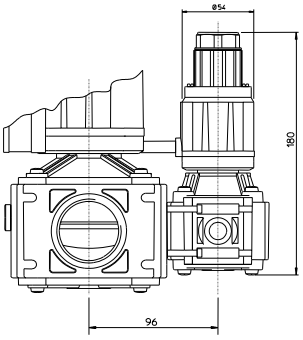

EG40 valve with by-pass type "L"

The figure shows a gas valve with "GFD" connection; the type of connection ("GFD" or "GMO") does not affect the valve's overall dimensions.

ELECTRICAL CONNECTION

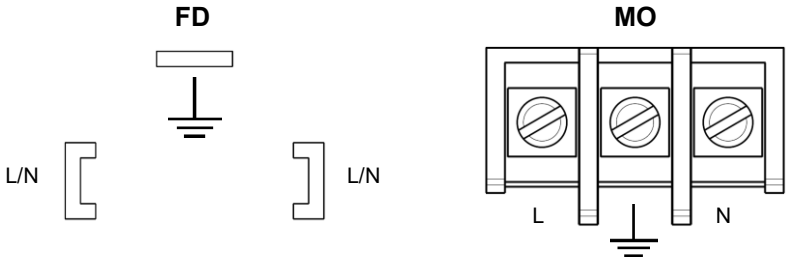

TYPES REFERENCES

EG40 * S R P * S R D 25* G FD 8 P D 230/50-60

Type

Type	Description
EG40	G1½" inlet-outlet Ø40 orifice

Opening type (fast/slow)

Type	Description
S	Fast opening valve.
L	Slow opening valve (this version is inclusive of flow adjuster).

Flow adjustment
Valve fitted with equipment for flow adjustment.

Pressure plug
Valve inclusive of pressure plug with G1/4" connections.

Valve fitted with BY-PASS
By-pass valve supply voltage and connections are the same of the main gas valve; therefore both "GMO" or both "GFD".

By-pass type

Type	Description
S	Fast opening.
SR	Fast opening with flow adjustment.
L	Slow opening with flow adjustment.

Supply voltage

Type	Description
230/50-60	230 Vac / 50-60 Hz

Gas pressure switch position

Type	Description
D	Right
S	Left

Gas pressure switch type

Type	Description
P	Fixed setting
PR	adjustable setting

Test pressure point position

Type	Description
5	Outlet left
6	Outlet right
7	Inlet left
8	Inlet right

Connection type

Type	Description
FD	Connection with fast-on DIN
MO	Connection with terminal board.

Winding type

Type	Description
G	Supply in alternate current, but valve operates in direct current thanks to an embodied rectification bridge.

By-pass model

Type	Description
	Standard By-pass
25	By-pass made up EG25 valve

By-pass position

Type	Description
D	Right
S	Left

SUMMARY TABLE

TYPE	Operating pressure (mbar)	Orifice diameter (mm)	Connection	Weight (g)	Coil	Consumption (W) at starting **(*)**	Consumption in running (W)	Flow (m³/h gas with ΔP2.5mbar)
EG40∗S	0÷200	40	G 1½"	3485	BE9*G..	70	20 (30VA)	50
EG40*SR	0÷200	40	G 1½"	3505	BE9*G..	70	20 (30VA)	50
EG40*L	0÷200	40	G 1½"	3755	BE9*G..	138	37	50

(*) Starting time 3 seconds Versions S-SR
Starting time 120 seconds Versions L

NOTES FOR PRODUCT DISPOSAL

The device contains electronic components and cannot therefore be disposed of as normal household waste. For the disposal procedure, please refer to the local rules in force for special waste.

ATTENTION --> Company Brahma S.p.A. declines any responsibility for any damage resulting from Customer tampering with the device.

BRAHMA S.p.A.
Via del Pontiere, 31
37045 Legnago (VR) - ITALY
Tel. +39 0442 635211 - Fax +39 0442 25683
http://www.brahma.it
E-mail: brahma@brahma.it

20/06/2023 Subject to amendments without notice